PART NO.	TYPE	A-BORE	B-BORE
4304-0374	RH	1 1/4	5/8
4304-0375	LH	1 1/4	5/8
4304-0376	RH	1 1/4	3/4
4304-0377	LH	1 1/4	3/4
4304-0378	RH	1.0	5/8
4304-0379	LH	1.0	5/8
4304-0380	RH	1.0	3/4
4304-0381	LH	1.0	3/4
4304-0382	RH	1.0	1.0
4304-0383	LH	1.0	1.0
4304-0384	RH	3/4	3/4
4304-0385	LH	3/4	3/4
4304-0386	RH	3/4	5/8
4304-0387	LH	3/4	5/8
4304-0388	RH	5/8	5/8
4304-0389	LH	5/8	5/8
4304-0396	RH	1.50	1.0
4304-0397	LH	1.50	1.0

INPUT TORQUE = OUTPUT TORQUE/1.24, IN. LBS.

RPM	OUTPUT TORQUE, IN. LBS.
33	369
50	320
100	256
200	203
300	176
400	126
500	115
1000	92
1200	70

MAX. HAND TORQUE - 609 IN. LBS.

KEY SIZES: 5/8 BORE -- 3/16
3/4 BORE -- 3/16
1.0 BORE -- 1/4
1 1/4 BORE -- 1/4

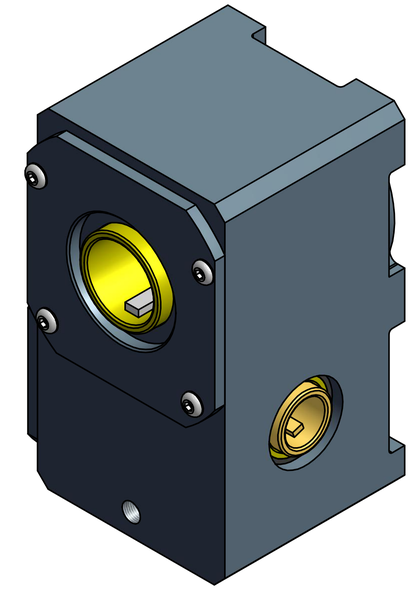

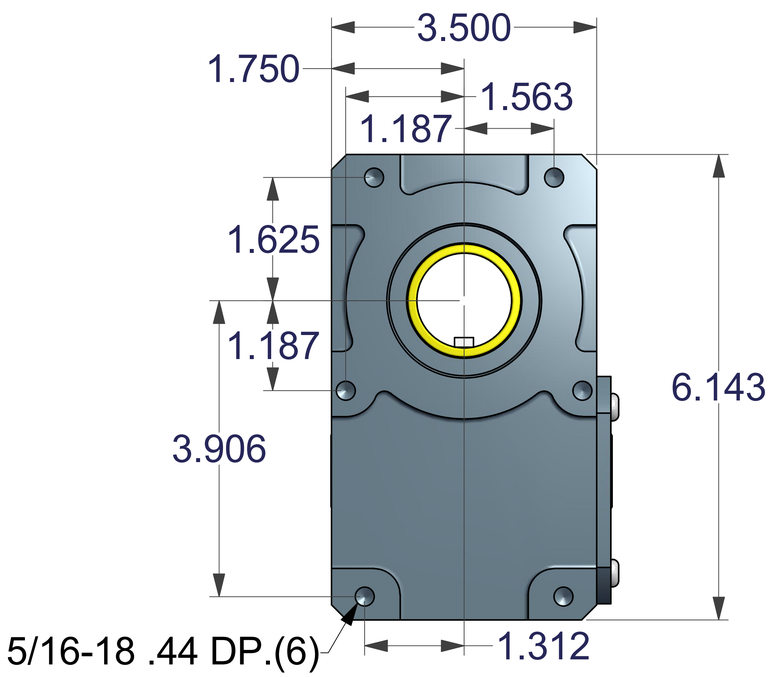

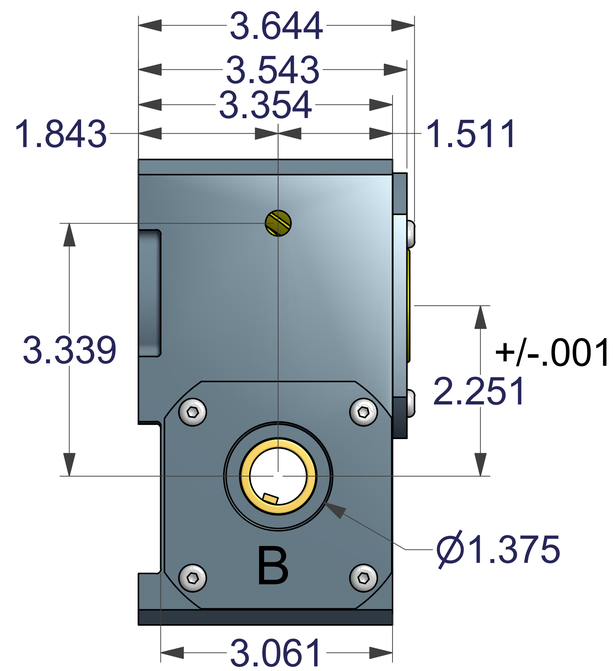

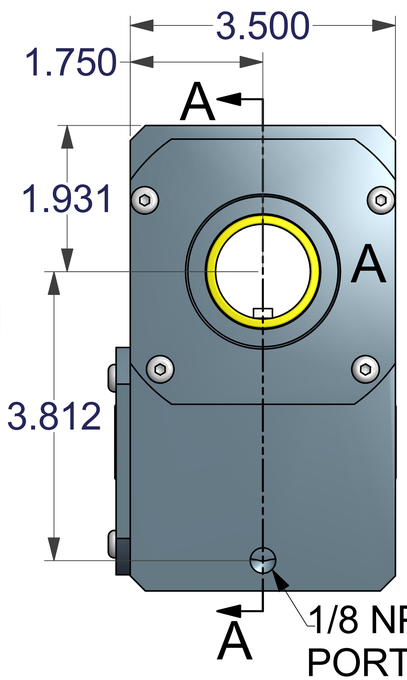

SECTION A-A
SCALE 1 : 1

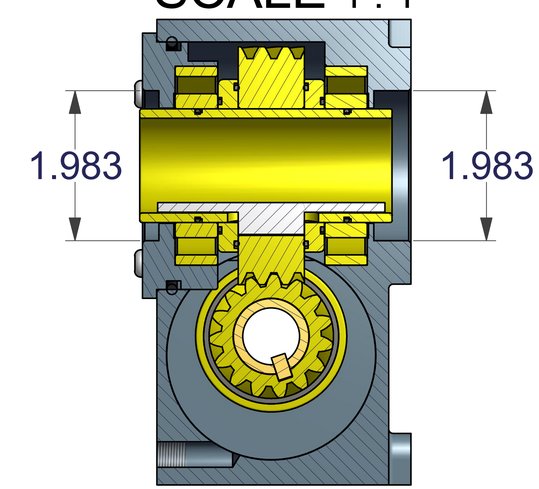

* 8620 HEAT TREATED GEARS
* (2) R24 DBL. SEALED BEARINGS A-BORE
* (2) R16 DBL. SEALED BEARINGS B-BORE
* ANODIZED ALUM. HOUSING & CAPS
* PREFILLED WITH MAGNALUBE 'G' GRADE 2

UNLESS OTHERWISE SPECIFIED DO NOT SCALE DRAWING REMOVE ALL BURRS TAP DEPTHS FULL THD. DRILL DEPTHS FULL DIA.	THIRD ANGLE PROJECTION	SIZE D
TOLERANCES 2 PLACE +/-.010 3 PLACE +/-.005	DESIGNER WCB DATE 11/28/10 CHECKER DATE	WC BRANHAM INC. RIVER FALLS, WI
THREADS EXTERNAL CLASS 2A INTERNAL CLASS 2B	SCALE CLASS	TITLE IAS BASE MOUNT 2:1 RATIO SERIES
		DRAWING NO. / REVISION