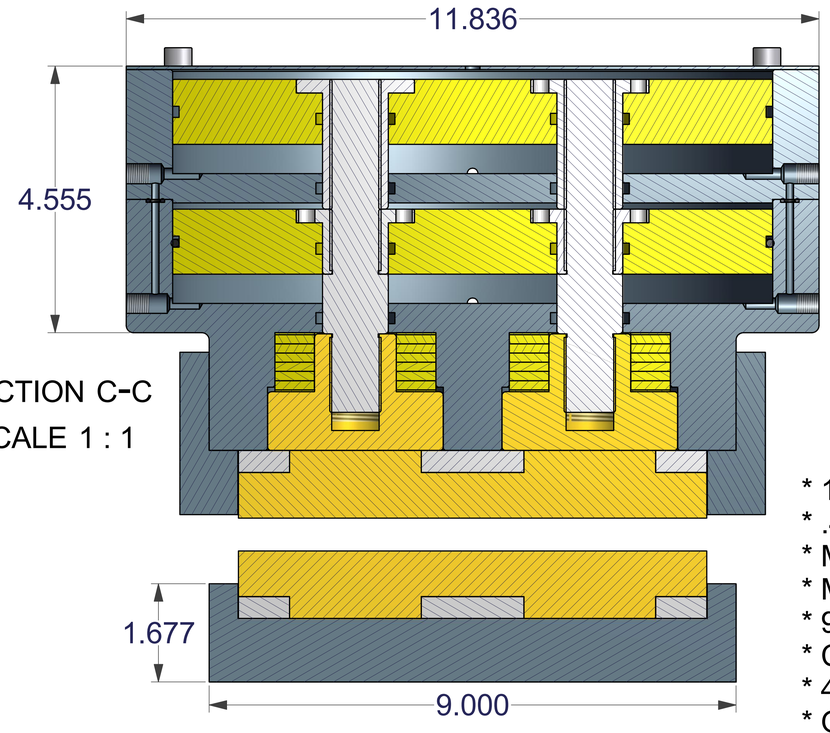

SECTION C-C
SCALE 1 : 1

DISC THK.	DIM. 'A'	DIM. 'B'
1/2	1.180	.560
5/8	1.305	.685
3/4	1.430	.810
1.0	1.555	1.060
1 1/8	1.680	1.185

DISC DIA.	BRAKING RADIUS
20	8.033
22	9.033
30	13.033
32	14.033
40	18.033
42	19.033

* 13,596 LBS. OF CLAMPING FORCE
* .45 COFF. OF FRICTION (PAD #951023)
* MIN. DISC DIA. -- 20 INCHES
* MAX. DISC DIA. -- UNLIMITED
* 90 PSI PNEUMATIC RELEASE PRESSURE
* CAST ALUMINUM CONSTRUCTION, HARDCOATED
* 47 SQ. INCHES TOTAL PAD AREA
* ONE INCH TOTAL PAD WEAR
* 24 CUBIC INCHES OF WEARABLE FRICTION MATERIAL
* ALL PORTS INTER CONNECTED
* DISC SPACERS FOR OTHER DISC WIDTHS ARE AVAILABLE

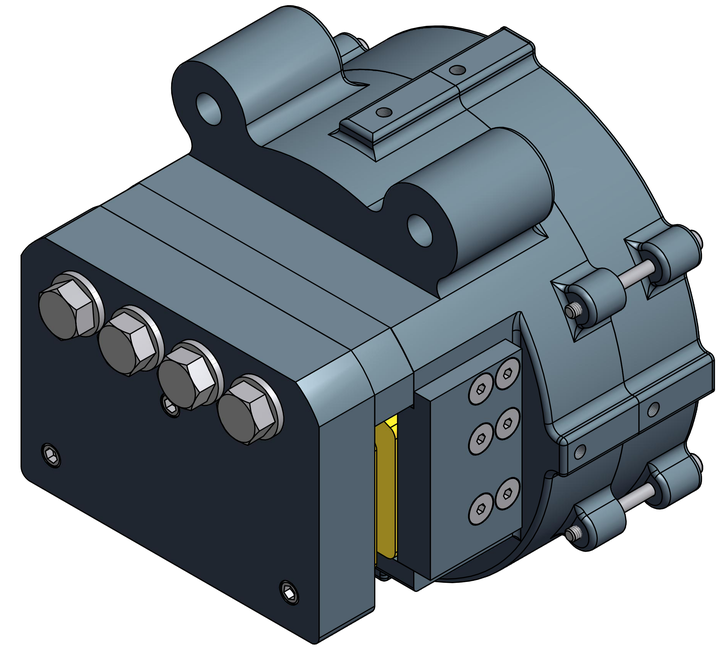

FOR PAD SERVICE CALIPER DOES NOT NEED TO BE REMOVED FROM MACHINE.
1. REMOVE (4) HHCS FROM DEAD SIDE HSG.
2. REMOVE (3) SHCS FROM BACK OF DEAD SIDE.
3. REMOVE (2)SIDE REACTOR PLATES FROM LIVE SIDE HSG.

MODEL NO.	DISC WIDTH	ASSEMBLY NO.
PFS520SE	(E) .500	4252-0060
PFS520SJ	(J) .625	4252-0061
PFS520ST	(T) .750	4252-0062
PFS520SO	(O) 1.00	4252-0063
PFS520SQ	(Q) 1.125	4252-0064

BRAKING RADIUS, INCHES = SQ. ROOT OF (DIM. 'C' SQUARED + 4.008)

TOTAL PAD WEAR, IN.	TANGENTIAL FORCE, LBS.
0	6,118
.06	5,244
.12	4,370
.18	3,496
.24	2,622
.30	1,748
.36	874
.42	0

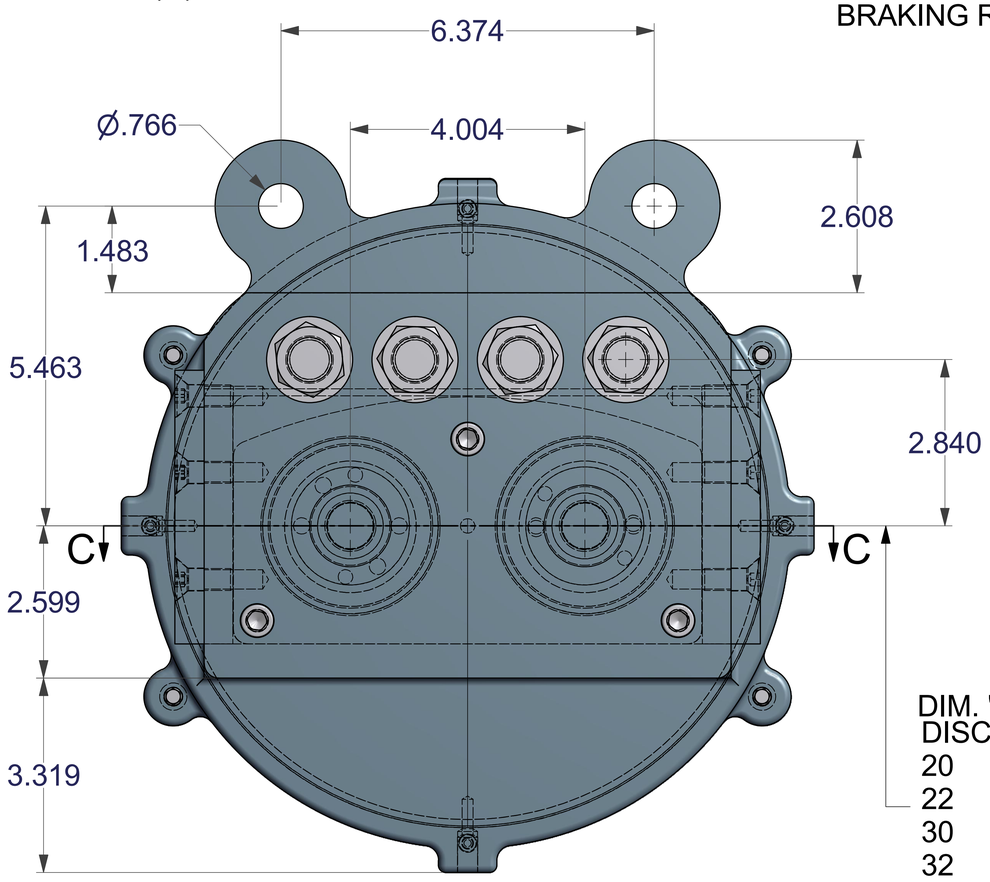

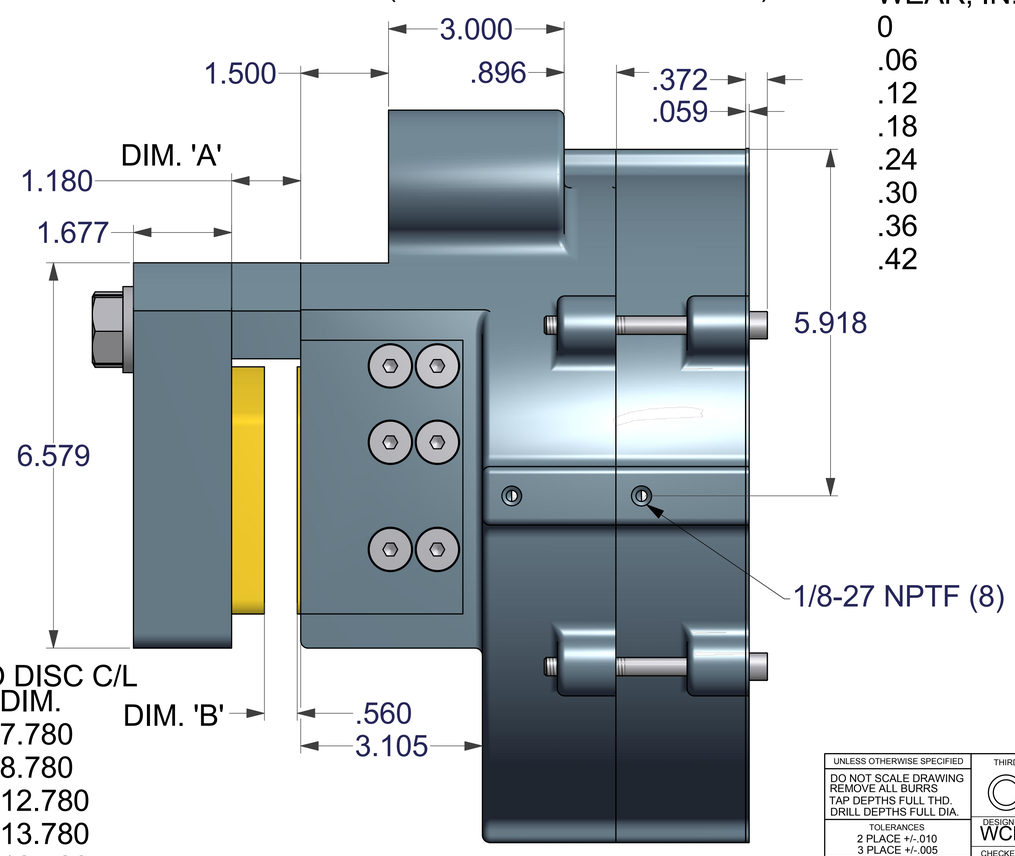

DISC DIA.	DIM. 'C' TO DISC C/L DIM.
20	7.780
22	8.780
30	12.780
32	13.780
40	18.780
42	19.780

UNLESS OTHERWISE SPECIFIED DO NOT SCALE DRAWING REMOVE ALL BURRS TAP DEPTHS FULL THD. DRILL DEPTHS FULL DIA. TOLERANCES 2 PLACE +/-.010 3 PLACE +/-.005 THREADS EXTERNAL CLASS 2A INTERNAL CLASS 2B	THIRD ANGLE PROJECTION DESIGNER WCB 10/17/10 CHECKER DATE SCALE CLASS	SIZE E WC BRANHAM INC. RIVER FALLS, WI TITLE PFS520SE DRAWING NO. REVISION