# SECTION A-A
SCALE .75

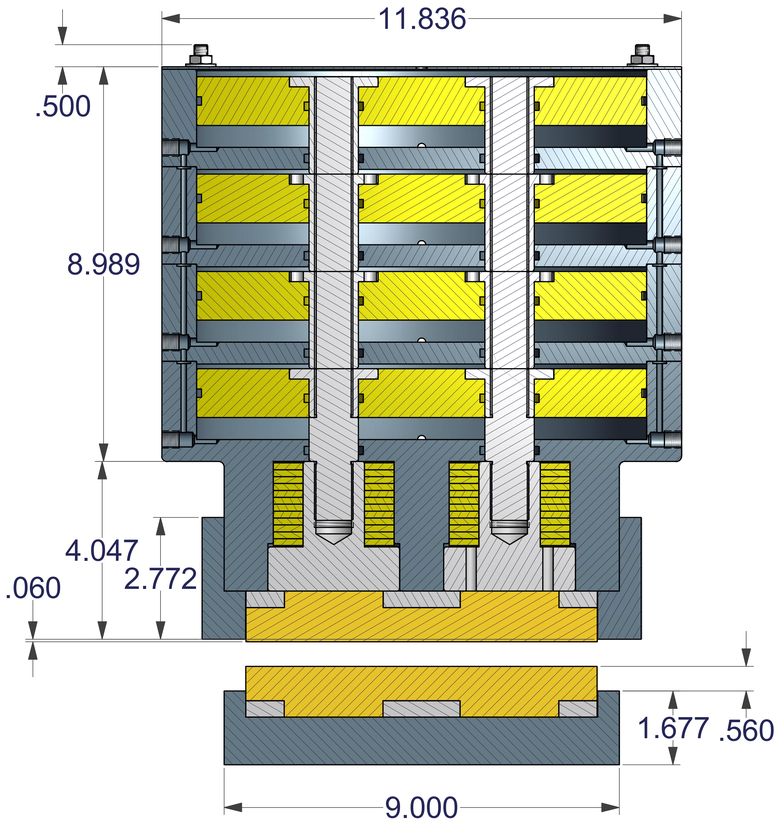


| DISC THK. | DIM. 'A' | DIM. 'B' |
|---|---|---|
| .500 | 1.180 | .560 |
| .625 | 1.305 | .685 |
| .750 | 1.430 | .810 |
| 1.0 | 1.555 | 1.060 |
| 1.125 | 1.680 | 1.185 |
| 1.181 | 1.860 | 1.920 |

| TOTAL PAD WEAR, IN. | TANGENTIAL FORCE, LBS. |
|---|---|
| 0 | 12,236 |
| .06 | 10,488 |
| .12 | 8,740 |
| .18 | 6,992 |
| .24 | 5,244 |
| .30 | 3,496 |
| .36 | 1,748 |
| .42 | 0 |

| DISC DIA. | BRAKING RADIUS |
|---|---|
| 20 | 8.033 |
| 22 | 9.033 |
| 30 | 13.033 |
| 32 | 14.033 |
| 40 | 18.033 |
| 42 | 19.033 |

* 27,192 LBS. OF CLAMPING FORCE
* .45 COFF. OF FRICTION (PAD #951023)
* MIN. DISC DIA. -- 20 INCHES
* MAX. DISC DIA. -- UNLIMITED
* 85 PSI PNEUMATIC RELEASE PRESSURE
* CAST ALUMMINUM CONSTRUCTION, HARDCOATED
* 47 SQ. INCHES TOTAL PAD AREA
* ONE INCH TOTAL PAD WEAR
* 24 CUBIC INCHES OF WEARABLE FRICTION MATERIAL
* DISC SPACERS FOR OTHER DISC WIDTHS ARE AVAILABLE

FOR PAD SERVICE CALIPER DOES NOT NEED TO BE REMOVED FROM MACHINE.
1. REMOVE (4) HHCS FROM DEAD SIDE
2. REMOVE (3) SHCS FROM BACK OF DEAD SIDE
3. REMOVE (2) SIDE REACTOR PLATES FROM LIVE SIDE HOUSING

| MODEL NO. | DISC WIDTH | ASSEMBLY NO. |
|---|---|---|
| PFS522SE | (E) .500 | 4252-0070 |
| PFS522SJ | (J) .625 | 4252-0071 |
| PFS522ST | (T) .750 | 4252-0072 |
| PFS522SO | (O) 1.00 | 4252-0073 |
| PFS522SQ | (Q) 1.125 | 4252-0074 |

BRAKING RADIUS, INCHES = SQ. ROOT OF(DIM. 'C' SQUARED + 4.008)

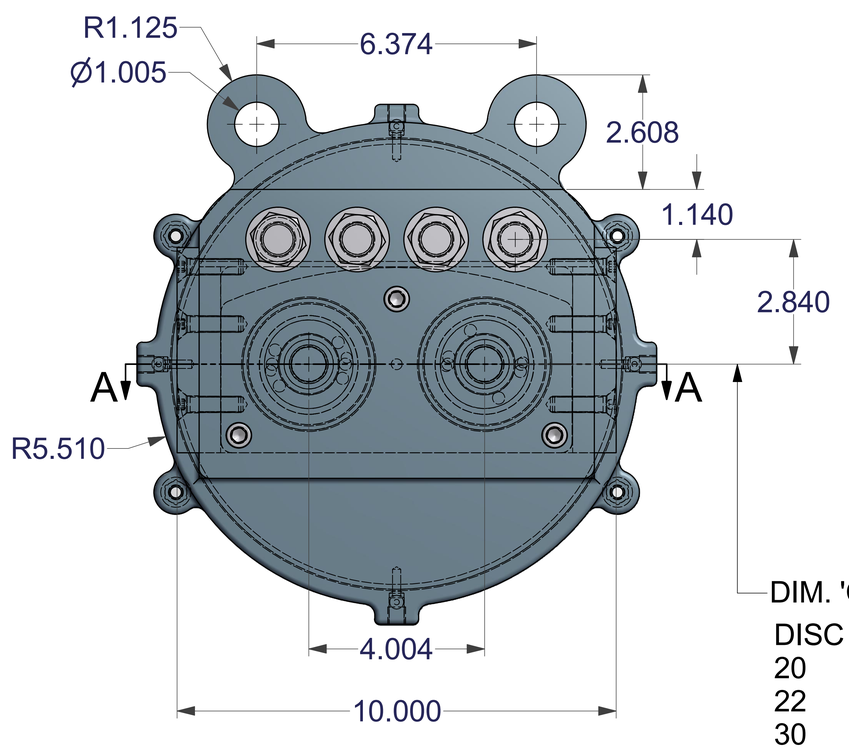


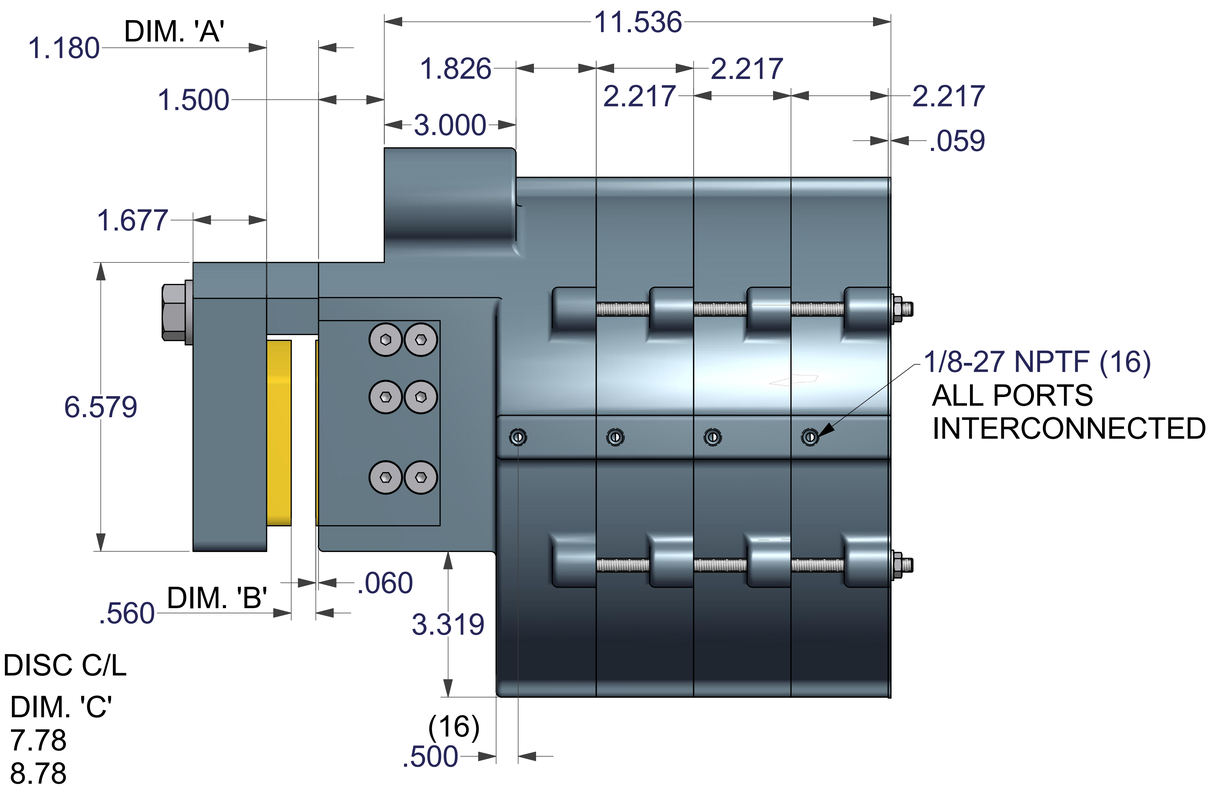


DIM. 'C' TO DISC C/L

| DISC DIA. | DIM. 'C' |
|---|---|
| 20 | 7.78 |
| 22 | 8.78 |
| 30 | 12.78 |
| 32 | 13.78 |
| 40 | 18.78 |
| 42 | 19.78 |

| | | |
|---|---|---|
| UNLESS OTHERWISE SPECIFIED<br>DO NOT SCALE DRAWING<br>REMOVE ALL BURRS<br>TAP DEPTHS FULL THD.<br>DRILL DEPTHS FULL DIA.<br>TOLERANCES<br>2 PLACE +/-.010<br>3 PLACE +/-.005<br>THREADS<br>EXTERNAL CLASS 2A<br>INTERNAL CLASS 2B | THIRD ANGLE PROJECTION<br>DESIGNER DATE<br>WCB 10/17/10<br>CHECKER DATE<br>SCALE<br>CLASS | SIZE E<br>WC BRANHAM INC.<br>RIVER FALLS, WI<br>TITLE<br>PFS522S SERIES<br>DRAWING NO.<br>REVISION |